ALBERT

Name _____ Date _____

Volume of Composite Figures Worksheet

Grade 5 · Common Core 5.MD.C.5c

> Recognize volume as additive. Find volumes of solid figures composed of two non-overlapping right rectangular prisms by adding the volumes of the non-overlapping parts, applying this technique to solve real world problems.

Practice

Builds the skill step by step.

1. A solid is made of two prisms that don't overlap: one is 3 by 2 by 2 units and one is 4 by 2 by 2 units. What is the total volume?

2. Prism A is 5 by 2 by 3 units and prism B is 2 by 2 by 3 units. They are joined without overlapping. What is the total volume?

3. What does it mean that volume is additive?

   A. Two solids always have the same volume.

   B. You add the length, width and height.

   C. Volume always increases.

   D. The volume of a solid made of non-overlapping parts is the sum of the parts' volumes.

4. A tower 2 by 2 by 6 units sits on a base 6 by 4 by 1 units. What is the total volume?

5. Two steps are prisms: one is 3 by 1 by 1 units and one is 3 by 1 by 2 units. What is the total volume?

6. A 4 by 4 by 4 box sits next to a 2 by 2 by 2 box. What is their total volume?

7. Part A has a volume of 40 cubic inches and part B has a volume of 25 cubic inches. What is the total volume?

8. A solid made of two parts has a volume of 50 cubic units. One part is 30 cubic units. What is the other part's volume?

9. A bookshelf is two boxes, each 3 by 1 by 2 feet. What is its volume?

10. A solid is made of a 5 by 3 by 2 prism and a 5 by 3 by 1 prism. What is its total volume?

ALBERT

Name _____ Date _____

Volume of Composite Figures Worksheet

Grade 5 · Common Core 5.MD.C.5c

On Level

Grade-level practice.

1. The figure shows the top view of an L-shaped solid that is 4 feet tall. What is its volume?

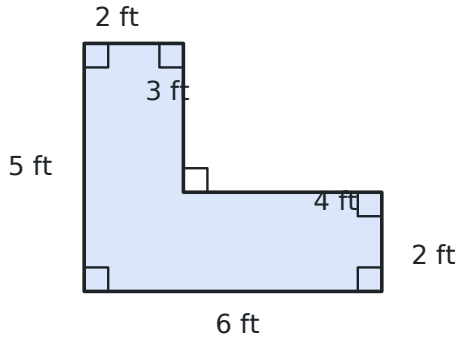

2. The same L-shaped solid (4 feet tall) is split into a left part 2 ft wide and 5 ft long and a right part. What is the volume of the right part?

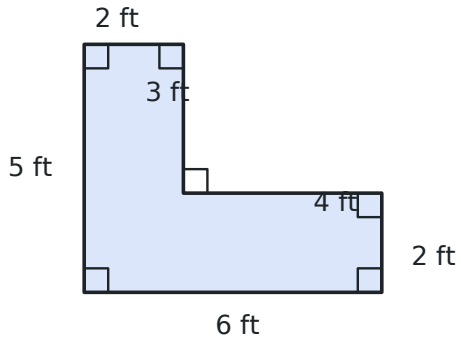

3. A room is 10 by 8 by 8 feet, with a closet 3 by 2 by 8 feet attached. What is the total volume?

4. A cake has two layers: the bottom is 10 by 10 by 4 inches and the top is 6 by 6 by 4 inches. What is the total volume?

5. Explain how to find the volume of the L-shaped solid in the figure (4 feet tall), and find it.

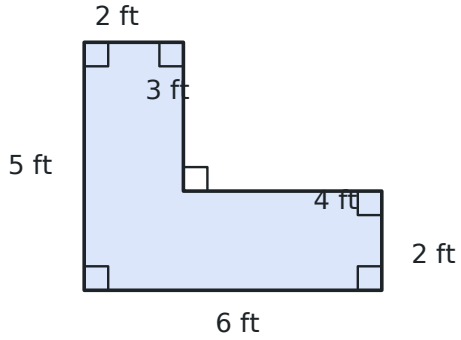

6. A pool has a shallow part 10 by 8 by 3 feet and a deep part 6 by 8 by 5 feet. What is the total volume?

7. A solid made of two prisms has a volume of 100 cubic units. One prism is 4 by 5 by 3. What is the other prism's volume?

8. A staircase has 3 steps, each 4 units long and 1 unit deep. The steps are 1, 2 and 3 units tall. What is the total volume?

9. Why must the parts not overlap when you add volumes?

   A. It doesn't matter.

   B. Overlapping parts would count some space twice.

   C. Overlapping parts are always smaller.

   D. You can't measure overlapping parts.

10. A solid is made of a 6 by 3 by 2 prism and a 3 by 3 by 2 prism. What is its volume?

Volume of Composite Figures Worksheet

Grade 5 · Common Core 5.MD.C.5c

Challenge

Multi-step and word problems that stretch it.

1. A box is 6 by 5 by 4 inches. A square hole 2 by 2 inches goes all the way through its 4-inch height. What volume is left?

2. A garage is 20 by 12 by 10 feet, and a shed 8 by 6 by 10 feet is attached. What is the total volume?

3. A solid has a total volume of 90 cubic units. Part A is 5 by 3 by 4. Part B has a base 3 by 2. How tall is part B?

4. A T-shaped solid has a top bar 7 by 2 by 2 units and a stem 2 by 2 by 5 units. What is the total volume?

5. Two 4 by 3 by 2 prisms are stacked, and a 2 by 3 by 2 prism is added on the side. What is the total volume?

6. The figure shows the top view of an L-shaped building that is 5 meters tall. What is its volume?

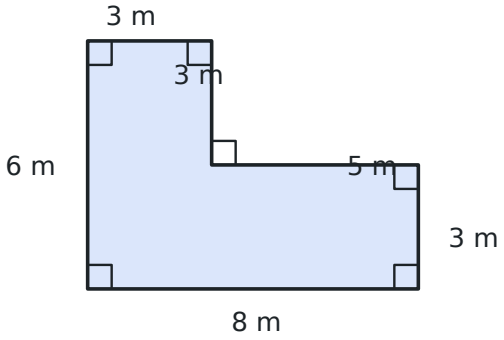

7. A planter has two parts: 6 by 2 by 2 feet and 4 by 2 by 2 feet. Each bag holds 2 cubic feet of soil. How many bags fill it?

8. Three boxes are 2 by 2 by 2, 3 by 3 by 3 and 4 by 4 by 4 units. What is their total volume?

9. Two prisms must total 60 cubic units. One is 3 by 4 by 3. The other has a base 4 by 2. How tall must it be?

10. Ben says the volume of the L-shaped solid in the figure is $6 \times 5 \times 4 = 120$ cubic feet. Explain his mistake and find the correct volume.

