ALBERT

Name _____ Date _____

Area with Fractional Side Lengths Worksheet

Grade 5 · Common Core 5.NF.B.4b

> Find the area of a rectangle with fractional side lengths by tiling it with unit squares of the appropriate unit fraction side lengths, and show that the area is the same as would be found by multiplying the side lengths. Multiply fractional side lengths to find areas of rectangles, and represent fraction products as rectangular areas.

Practice

Builds the skill step by step.

1. What is the area of the rectangle?

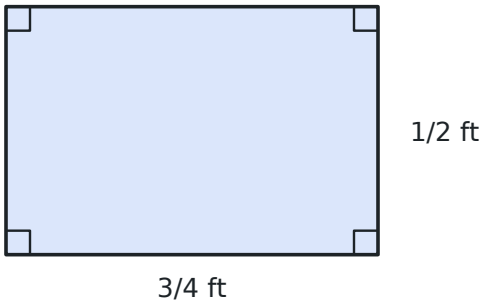

2. A unit square is split into 3 equal columns and 4 equal rows of tiles. What is the area of one tile?

3. A rectangle is covered by 6 tiles with no gaps or overlaps. Each tile has an area of $\frac{1}{12}$ square unit. What is the area of the rectangle in simplest form?

4. A rectangle is $\frac{2}{3}$ meter long and $\frac{1}{2}$ meter wide. What is its area in simplest form?

5. A rectangle is $\frac{2}{5}$ yard long and $\frac{3}{4}$ yard wide. Which expression gives its area in square yards?

   A. $\frac{2}{5} + \frac{3}{4}$

   B. $\frac{2}{5} \times \frac{3}{4}$

   C. $2 \times (\frac{2}{5} + \frac{3}{4})$

   D. $\frac{3}{4} - \frac{2}{5}$

6. A square sticker is $\frac{1}{2}$ inch on each side. What is its area?

7. A 1-foot by 1-foot square is divided into 4 equal columns and 3 equal rows. A rectangle covers exactly 3 of the columns and 2 of the rows. What is the area of the rectangle in simplest form?

8. A shelf is $\frac{5}{6}$ foot deep and 3 feet long. What is the area of the shelf? Write your answer as a mixed number.

9. A square tile is $\frac{3}{4}$ centimeter on each side. What is its area?

10. A rectangle has an area of $\frac{6}{20}$ square meter. Which could be its side lengths?

    A. $\frac{1}{4}$ m and $\frac{3}{5}$ m

    B. $\frac{2}{5}$ m and $\frac{3}{4}$ m

    C. $\frac{2}{5}$ m and $\frac{1}{4}$ m

    D. $\frac{3}{5}$ m and $\frac{3}{4}$ m

ALBERT

Name _____ Date _____

Area with Fractional Side Lengths Worksheet

Grade 5 · Common Core 5.NF.B.4b

On Level

Grade-level practice.

1. A rectangle is $2\frac{1}{2}$ feet long and $1\frac{1}{2}$ feet wide. What is its area? Write your answer as a mixed number.

2. What is the area of the rectangle?

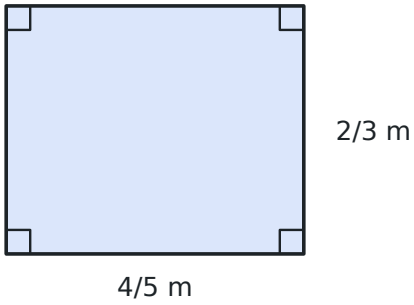

3. A garden bed is $3\frac{1}{3}$ yards long and $\frac{3}{4}$ yard wide. What is its area? Write your answer as a mixed number in simplest form.

4. Ray covers a rectangle that is $\frac{2}{3}$ foot by $\frac{3}{4}$ foot with tiles that are $\frac{1}{3}$ foot by $\frac{1}{4}$ foot, with no gaps or overlaps. How many tiles does he use?

   A. 5

   B. 6

   C. 7

   D. 12

5. A strip of paper is $\frac{5}{8}$ inch wide and 4 inches long. What is its area? Write your answer as a mixed number in simplest form.

6. A poster is $1\frac{1}{4}$ meters long and $\frac{3}{5}$ meter wide. What is its area in simplest form?

7. A rectangle has an area of $\frac{3}{10}$ square foot. Its length is $\frac{3}{5}$ foot. What is its width?

8. What is the area of the rectangle?



9. Which rectangle has the greatest area?

   A. $\frac{3}{4}$ ft by $\frac{2}{3}$ ft

   B. $\frac{5}{6}$ ft by $\frac{1}{2}$ ft

   C. $\frac{1}{2}$ ft by $\frac{1}{2}$ ft

   D. $\frac{2}{5}$ ft by $\frac{3}{4}$ ft

10. A cutting board is $2\frac{1}{3}$ feet long and $1\frac{1}{2}$ feet wide. What is its area? Write your answer as a mixed number.

ALBERT

Name _____ Date _____

Area with Fractional Side Lengths Worksheet

Grade 5 · Common Core 5.NF.B.4b

Challenge

Multi-step and word problems that stretch it.

1. A rug is $3\frac{1}{2}$ feet long and $2\frac{1}{4}$ feet wide. What is its area? Write your answer as a mixed number.

2. Rectangle A is $\frac{3}{4}$ foot by $\frac{2}{3}$ foot. Rectangle B is $\frac{5}{8}$ foot by $\frac{2}{5}$ foot. How much greater is the area of Rectangle A?

3. A square has sides of $\frac{2}{3}$ yard. What is its area?

4. A tabletop is $1\frac{1}{2}$ meters long and $\frac{3}{4}$ meter wide. A placemat covers $\frac{1}{3}$ of the tabletop's area. What is the area of the placemat?

5. Leo says a rectangle that is $\frac{1}{2}$ foot by $\frac{3}{4}$ foot has an area of $\frac{4}{6}$ square foot. Find the correct area.

6. A card is $\frac{3}{5}$ inch by $\frac{5}{6}$ inch. What is its area in simplest form?

7. A rectangle is tiled with tiles that are $\frac{1}{5}$ unit long and $\frac{1}{3}$ unit wide. It is 4 tiles long and 2 tiles wide. Which equation shows its area?

   A. $\frac{1}{5} \times \frac{1}{3} = \frac{1}{15}$

   B. $\frac{4}{5} + \frac{2}{3} = \frac{22}{15}$

   C. $\frac{4}{5} \times \frac{2}{3} = \frac{8}{15}$

   D. $4 \times 2 = 8$

8. A garden is $2\frac{2}{3}$ yards long and $1\frac{1}{2}$ yards wide. What is its area?

9. A rectangle that is $\frac{4}{5}$ foot by $\frac{5}{8}$ foot is cut into two equal halves. What is the area of each half?

10. A square tile that is $\frac{3}{4}$ meter on each side sits on a rectangular mat that is $1\frac{1}{2}$ meters by 1 meter. How much of the mat's area is not covered by the tile?